Vendo® Engineering *Uni-1 3D* *Narrow Column Set Up Guide*

Size: 16oz / 473ml **Rev. B** **Date 5/31/00**
Pkg. Description/Type: TROPICANA PET
Franchise: PEPSI **KIT#**

Column Setup

Cam Setting	Back Spacer	Theft Rod Location	Slider Lower Strap	Gage Bar Location	Side Spacer	Sold Out Flap	Sold Out Spacer
2	13	N/A	N/A	#2	1041282 Loc. #2	Short* 1083449	1077457

Note: To properly vend product the Uni-1 3D must have the columns set up as illustrated. *Spring Loc. Rt (Low Tension) side.

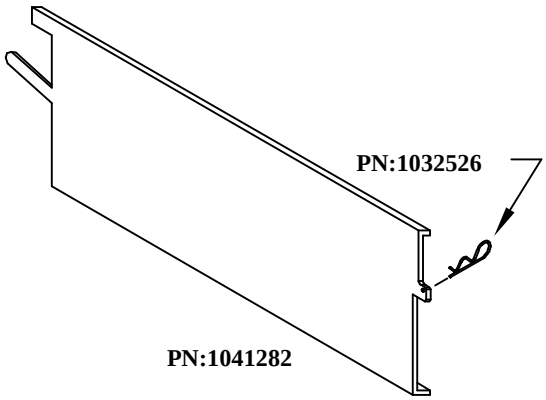

Shim/Spacer

Set Up Guide

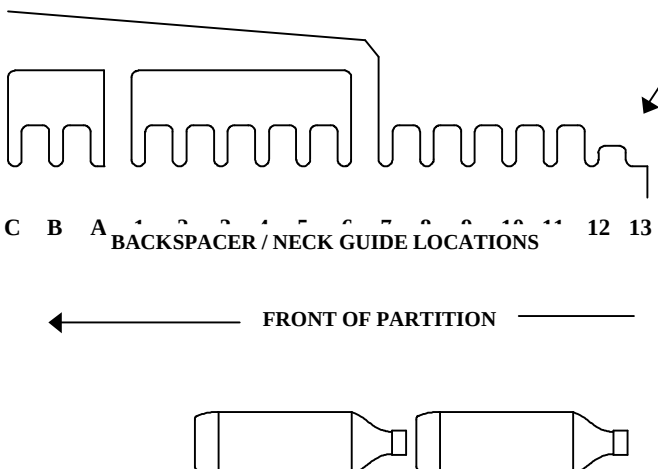

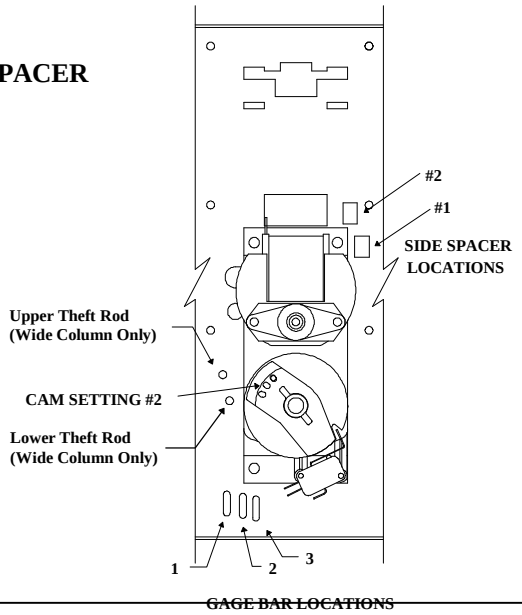

Note: Placement of bottle caps is to the back of the vendor

FOR OTHER PRODUCT SET-UP GUIDES, CONTACT THE VENDO COMPANY.

Installation Instruction #

TEL: (559) 439-1770 FAX: (559) 439-2083.

Installation Instruction #