Vendo® Engineering *Uni-1 3D Wide Column Set Up Guide*

Size: 16oz / 473ml **Rev. A** **Date 4/18/2000**

Pkg. Description/Type: PEPSI - OCEAN SPRAY PET

Franchise: PEPSI **KIT#**

Column Setup

Cam Setting	Back Spacer	Theft Rod Location (**)	Slider Lower Strap	Gage Bar Location	Side Spacer	Sold Out Flap	Sold Out Spacer
2	12	Upper Location	N/A	#1	2-1121708 Loc. #1	Short 1083449	1077457

Note: To properly vend product the Uni-1 3D must have the columns set up as illustrated.

****Theft Rod (PN:389693) and Clip (PN: 387450) required.**

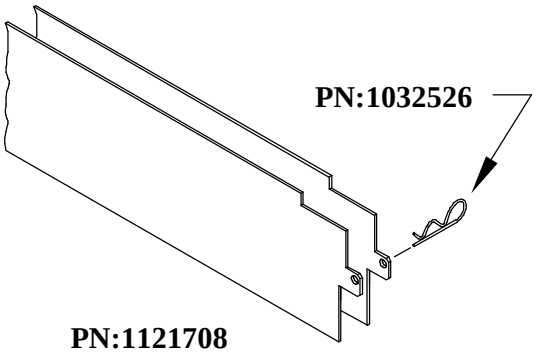

Shim/Spacer

Set Up Guide

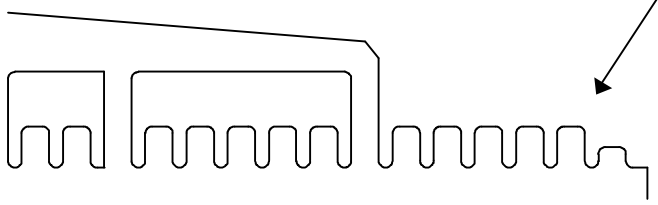

FRONT OF PARTITION

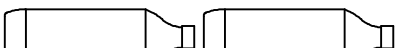

Note: Placement of bottle caps is to the back of the vendor

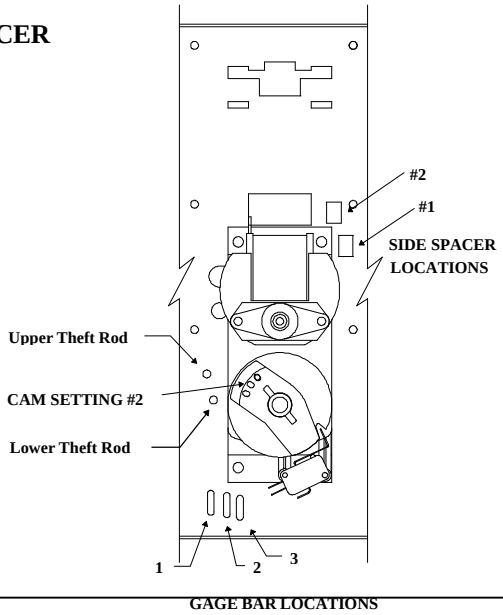

FOR OTHER PRODUCT SET-UP GUIDES, CONTACT THE VENDO COMPANY.

Installation Instruction #

TEL: (559) 439-1770 FAX: (559) 439-2083.

Installation Instruction #