Vendo® Engineering *Uni-1 3D Narrow Column Set Up Guide*

Size: 16oz / 473ml **Rev. A** **Date 4/17/2000**
Pkg. Description/Type: PEPSI - LIPTON'S ICED TEA GLASS (ROCKET BOTTLE)
Franchise: PEPSI **KIT#**

Column Setup

Cam Setting	Back Spacer	Theft Rod Location	Slider Lower Strap	Gage Bar Location	Side Spacer	Sold Out Flap	Sold Out Spacer
1	2	N/A	1038036	#1	2-1121708 Loc. #1	Short 1083449	1077457

Note: To properly vend product the Uni-1 3D must have the columns set up as illustrated.

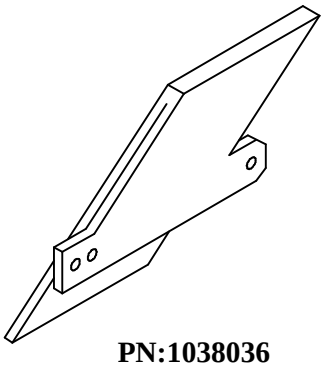

PN:1038036

Lower Front Strap Slider

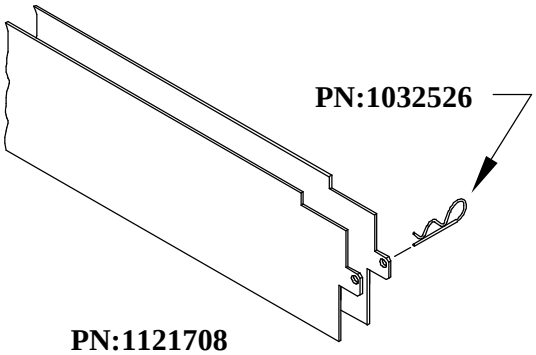

PN:1121708

Shim/Spacer

Set Up Guide

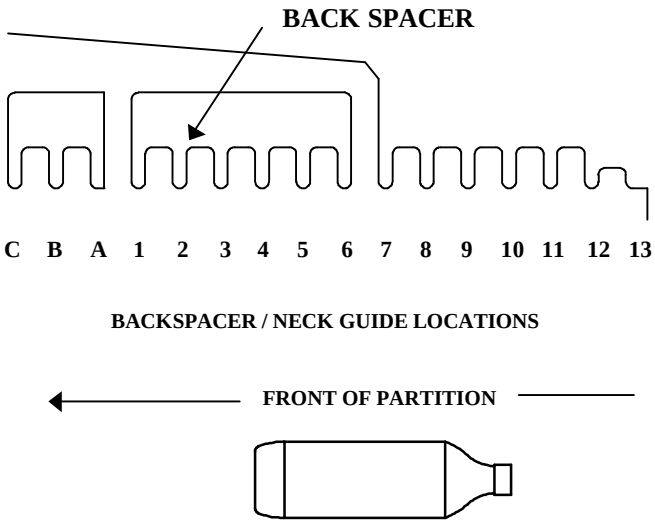

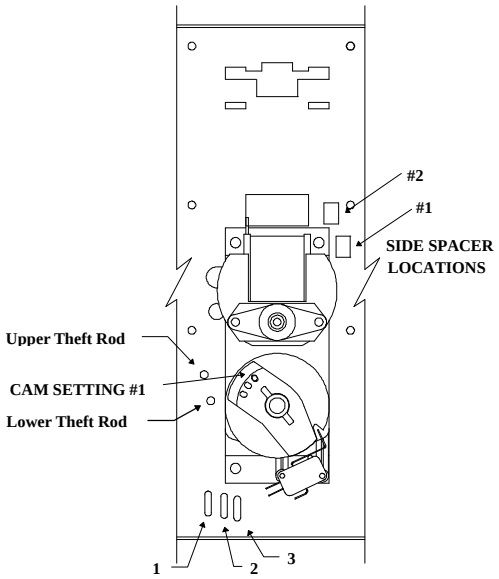

Note: Placement of bottle caps is to the back of the vendor

FOR OTHER PRODUCT SET-UP GUIDES, CONTACT THE VENDO COMPANY.
TEL: (559) 439-1770 FAX: (559) 650-3455.

Installation Instruction #